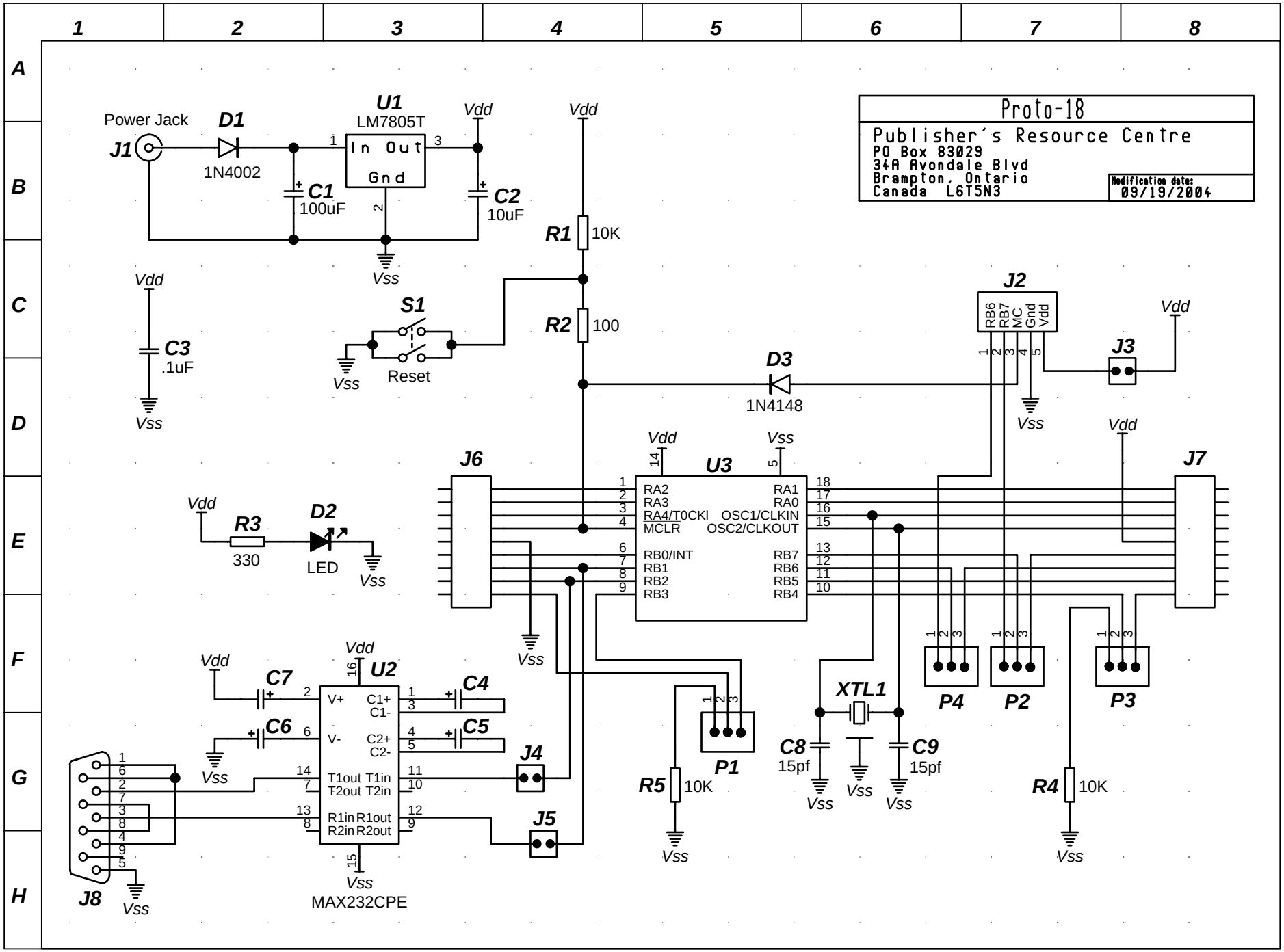
Proto-18
Publisher's Resource Centre
PO Box 83029
34A Avondale Blvd
Brampton, Ontario
Canada L6T5N3
Modification date:
09/19/2004
Power Jack
J1
D1
1N4002
U1
LM7805T
In Out
Gnd
C1
100uF
C2
10uF
Vdd
Vss
R1
10K
R2
100
S1
Reset
C3
.1uF
D3
1N4148
J2
RB6
RB7
MC
Gnd
Vdd
J3
J6
J7
U3
RA2
RA3
RA4/T0CKI
MCLR
RB0/INT
RB1
RB2
RB3
RA1
RA0
OSC1/CLKIN
OSC2/CLKOUT
RB7
RB6
RB5
RB4
R3
330
D2
LED
P1
P2
P3
P4
XTL1
C8
15pf
C9
15pf
R4
10K
R5
10K
U2
V+
V-
C1+
C1-
C2+
C2-
T1out
T2out
T1in
T2in
R1in
R2in
R1out
R2out
C4
C5
C6
C7
J4
J5
J8
MAX232CPE