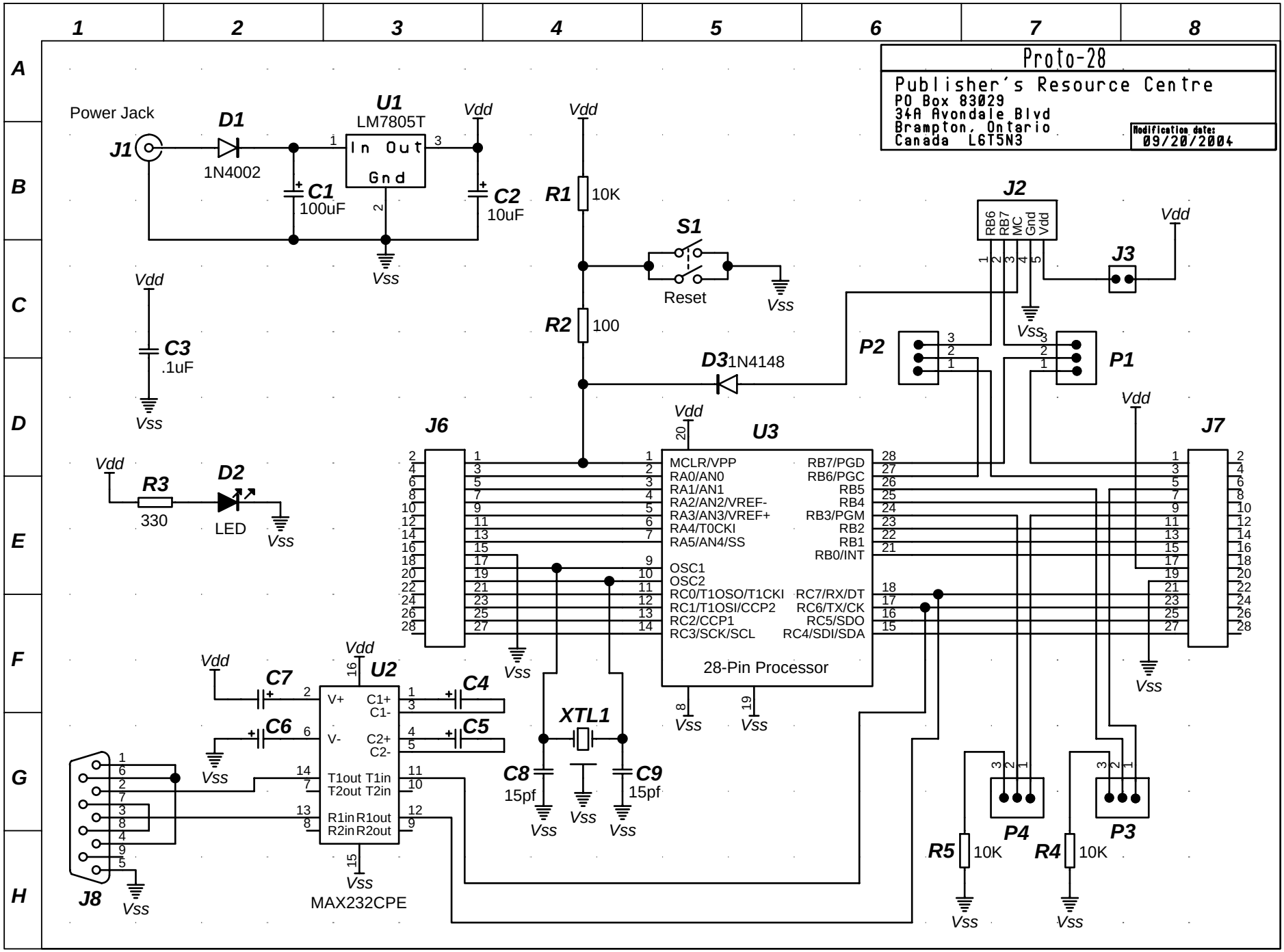
Proto-28
Publisher's Resource Centre
PO Box 83029
34A Avondale Blvd
Brampton, Ontario
Canada L6T5N3
Modification date:
09/20/2004
Power Jack
J1
D1
1N4002
U1
LM7805T
In Out
Gnd
C1
100uF
C2
10uF
Vdd
Vss
R1
10K
R2
100
S1
Reset
D3
1N4148
J2
RB6
RB7
MC
Gnd
Vdd
J3
P1
P2
C3
.1uF
R3
330
D2
LED
J6
J7
U3
MCLR/VPP
RA0/AN0
RA1/AN1
RA2/AN2/VREF-
RA3/AN3/VREF+
RA4/T0CKI
RA5/AN4/SS
OSC1
OSC2
RC0/T1OSO/T1CKI
RC1/T1OSI/CCP2
RC2/CCP1
RC3/SCK/SCL
RB7/PGD
RB6/PGC
RB5
RB4
RB3/PGM
RB2
RB1
RB0/INT
RC7/RX/DT
RC6/TX/CK
RC5/SDO
RC4/SDI/SDA
28-Pin Processor
U2
V+
V-
C1+
C1-
C2+
C2-
T1out T1in
T2out T2in
R1in R1out
R2in R2out
MAX232CPE
C4
C5
C6
C7
C8
15pf
C9
15pf
XTL1
J8
P3
P4
R4
10K
R5
10K